ANTEGRA
SINK FUSION

Tech Spec & Model Codes for the 500 Sink with a 16mm Step Ledge

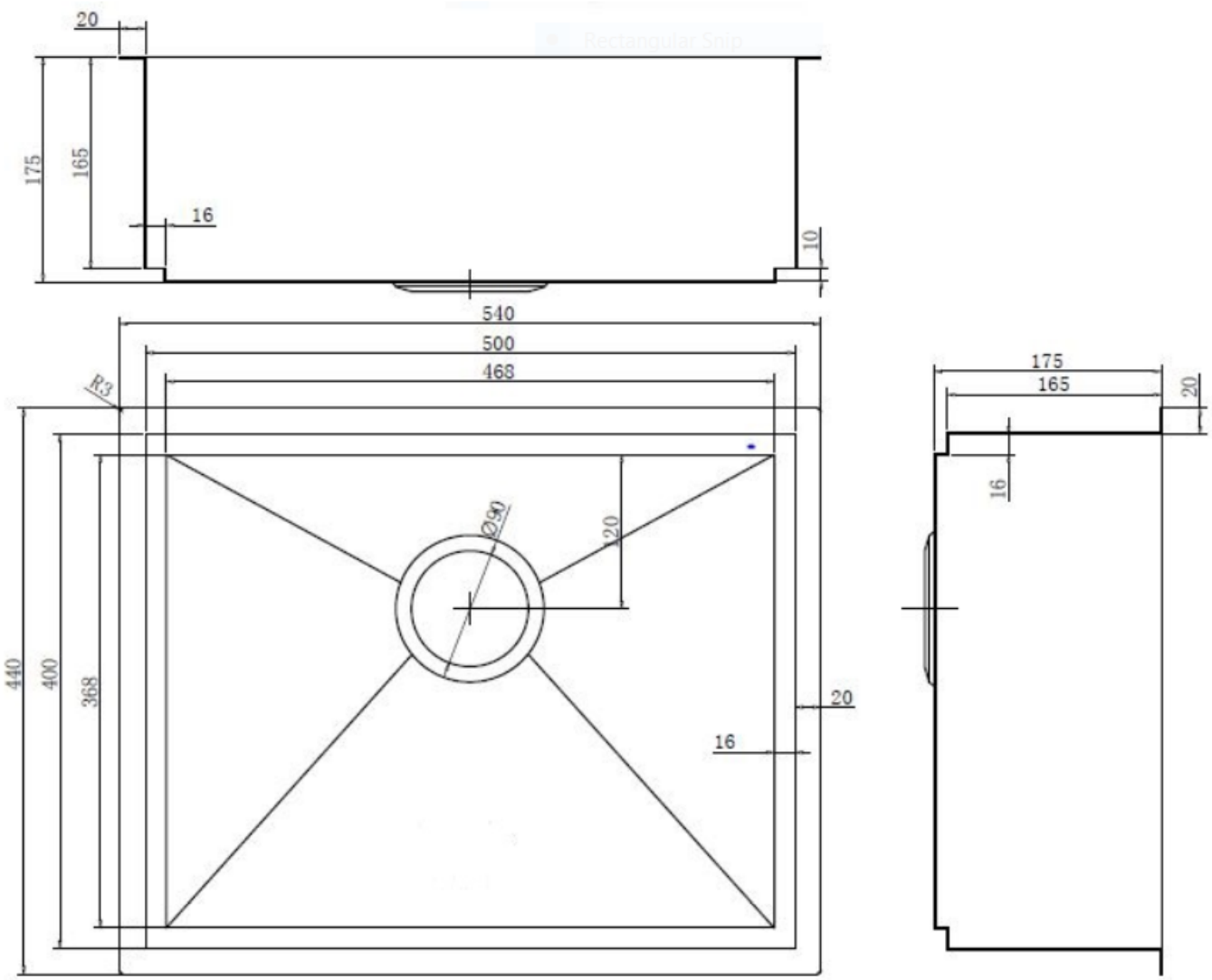

Stainless Steel	AU/ANT/500/16/ST
Gold Brass	AU/ANT/500/16/GB
Copper	AU/ANT/500/16/CO
Gun Metal	AU/ANT/500/16/GM